版本	变更原因	日 期	姓 名

FRONT VIEW

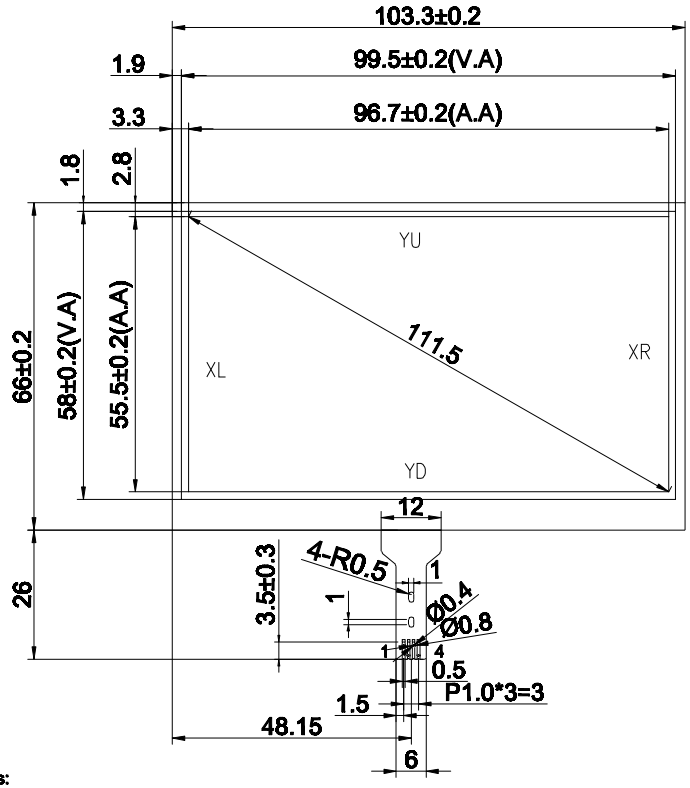

The strakes

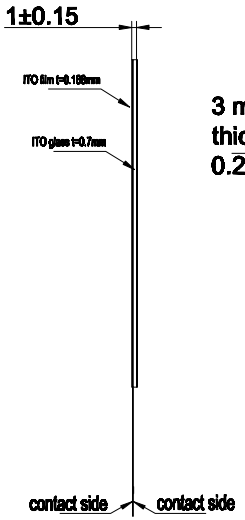

Back view

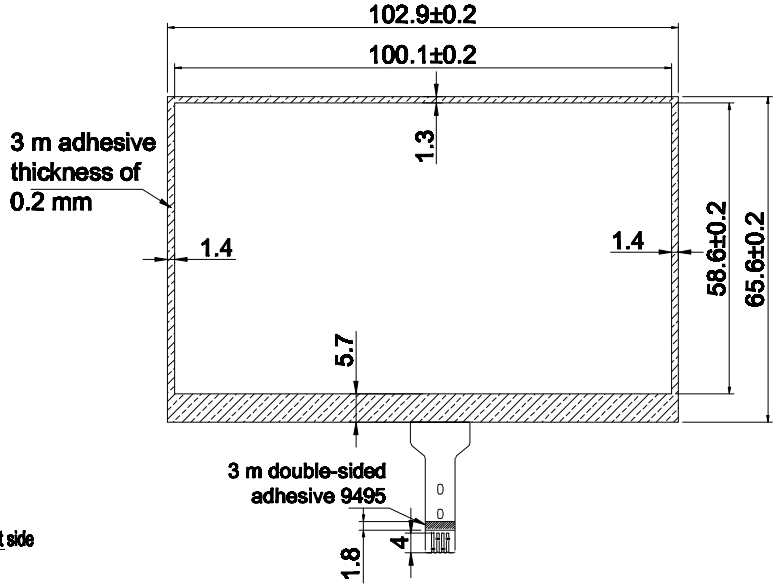

Notes:
1.Type:Film to Glass (Fog face cattle）
2.Operating Voltage:≤10v
3.Operation Temperature:-20℃～70℃
Storage Temperature:-30℃～80℃
4.Life Time:1.000.000 times
5.Connect Material:FPC
6.Response Time:≤10ms
7.Linearity:≤1.5%
8.Transmittance:≥78%
9.Surface Hardness≥3H(pencil)
10.Operation force:60g～150g
11.Resistance:X:100Ω-400Ω Y:450Ω-950Ω
12.Neutral product

逻辑表:

NO.	SYMBOL
1	YU
2	XL
3	YD
4	XR

TOLERANCES
(UNLESS OTHERWISE STATED)

DECIMALS	ANGLES ±0.5%
>2000MM	±2.00MM
1600< X ≤2000M	±1.20MM
1200< X ≤1600MM	±0.80MM
800< X ≤1200MM	±0.50MM
400< X ≤800MM	±0.40MM
120< X ≤400MM	±0.30MM
30< X ≤120MM	±0.20MM
<30MM	±0.10MM

格林触控 GreenTouch

Shenzhen GreenTouch Technology Co.,Ltd

Model No.:	GT-4W-43A-1	Size	4.3"	Ratio	16：9
Structure	G+F	Unit	mm	Scale	1:1
Design	Mr. Li	Date	2016.8.19	Page	1/1
Check	Pay for wei	Date	2016.8.19	Version	A0
Release	Wang Chen	Date	2016.8.19		